Der belastete Transformator

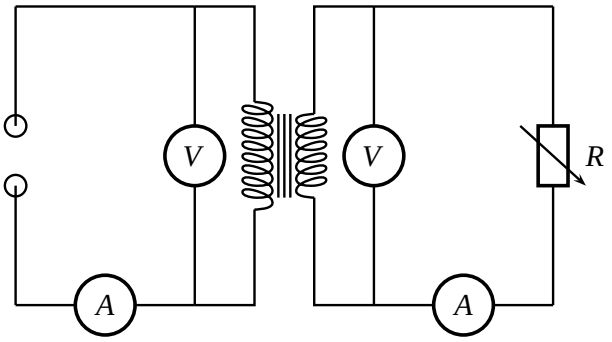

$U_1 =$ _____ $N_1 =$ _____ $N_2 =$ _____

U_2 in V	I_2 in mA	I_1 in mA			

Rendtel, 03.06.2009